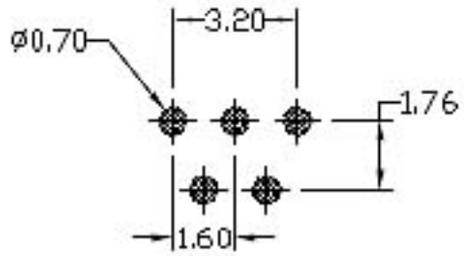

RECOMMEND P.C.B LAYOUT

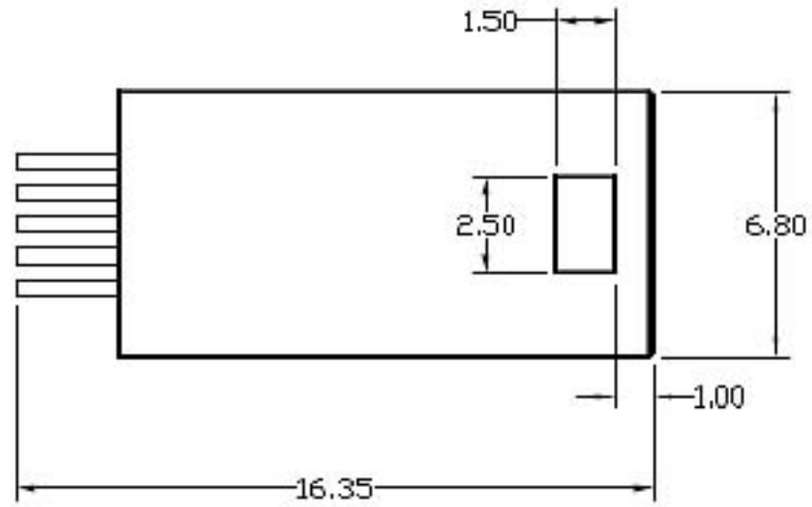

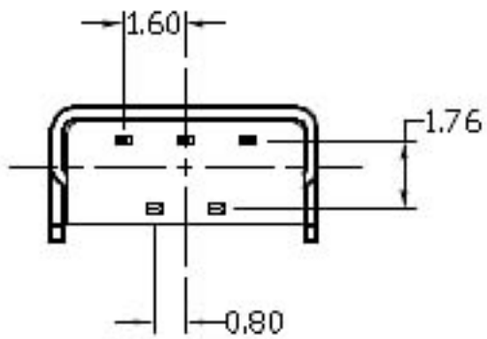

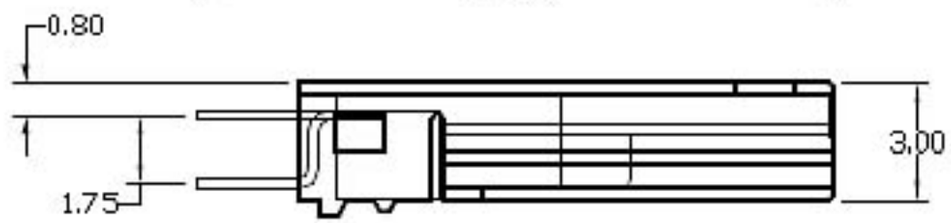

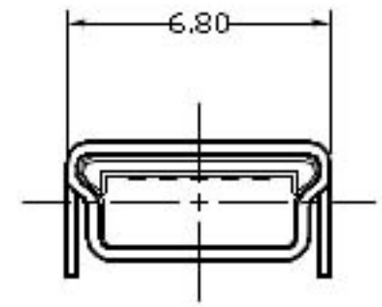

NOTES:

1.0. MATERIALS :

1.1. ALL DIMENSIONS ARE IN M/M.
1.2. SHELL MATERIAL : COPPER ALLEY 0.30±0.02.
FINISH : 100u" Ni PLATED OVER COPPER UNDERPLATED.
1.3. INSOULATOR MATERIAL : P.B.T.+30% G.F UL94V-0.
1.4. CONTACT AREA : 50u" MIN Ni OVER 30u" Au.

2.0. RATING : 80u" MIN Sn/Pb IN SOLDER TAIL AREA.

2.1. VOLTAGE : 30 VAC (R.M.S).
2.2. CURREN : 1.0 AMPERE MAXIMUM PER CONTACT AT 30° C T-RISE.
2.3. TEMPERATURE : -55°C TO +85°C.

3.0. ELECTRICAL SPECIFICATION :

3.1. CONTACT RESISTANCE : 30 MILLIOHMS MAXIMUN INITIAL.
3.2. INSULATION RESISTANCE : 1,000 MEGOHMS MININUM.
3.3. DIELECTRIC WITHTANDING VOLTAGE : 750 VAC AT SEE LEVER.

4.0. PART NO : YMUVG2071*

PLATING :
1=3u" GOLD PLATED OVER Ni. UNDERPLATED
2=15u" GOLD PLATED OVER Ni. UNDERPLATED
3=30u" GOLD PLATED OVER Ni. UNDERPLATED

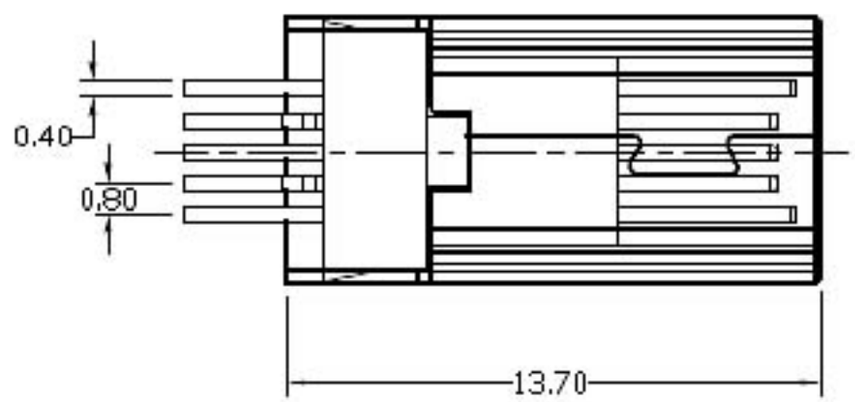

Remove burrs, Break sharp edges 0.4 R. max.
Stamp part no. in area indicated by "x"
Unless otherwise specified
Angle: ±1°

XX.X	=±0.20	.X"	=±
XX.XX	=±0.10	.XX"	=±.
XX.XXX	=±0.05	.XXX"	=±.

01	設計發行	CHEN 08/14/2003	料號	YMUVG20713
	TITLE	Min-B Plug Dip 180°		
SHEET 1/1	App Date	Chk Date	Drf. Date	
SCALE 1 : 1	CHEN 08/14/2003	CHEN 08/14/2003	CHEN 08/14/2003	

譽盛精密工業股份有限公司