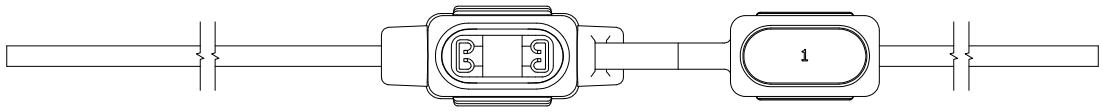

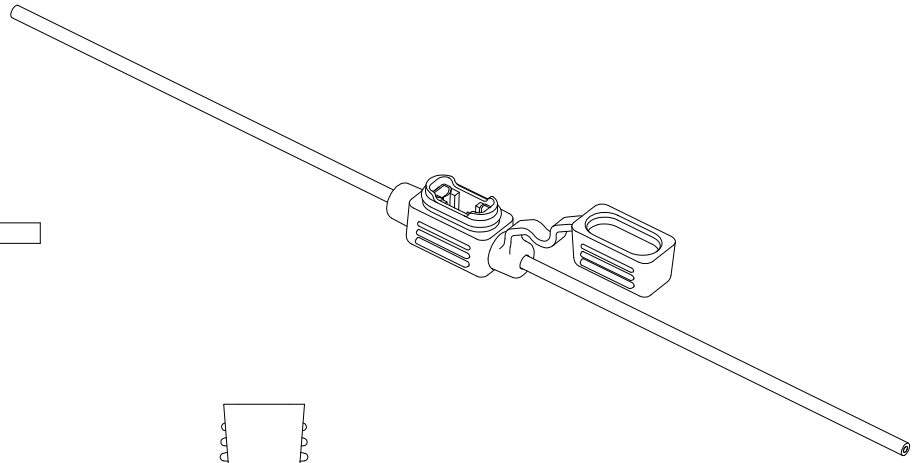

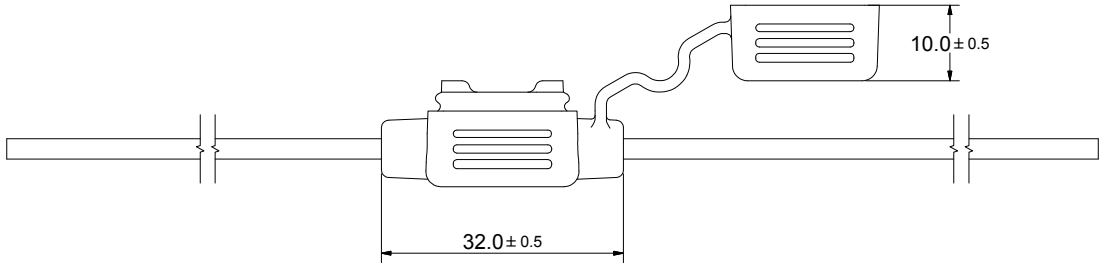

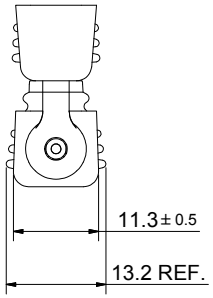

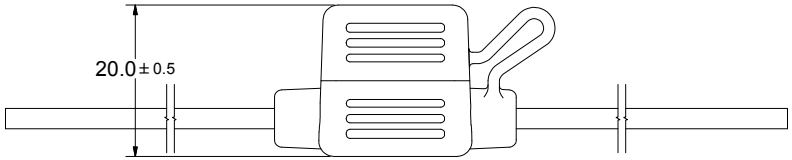

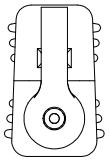

振豐電子
2015.01.15
發行章

IN-LINE FUSEHOLDER FOR LOW PROFILE MINI FUSE

Notes:

1.Material:
   Insulating body: PVC
   (Other: Rubber)
   Contacts: brass,tin plated
2.Max. rating: 30A 32V
3.Available wire gauge: #12~#20

UNLESS OTHERWISE SPECIFIED DIMENSIONS ARE IN mm TOLERANCE DECIMALS X±0.5 XX±0.25 ANGULAR ±2° DO NOT SCALE DRAWING		CUSTOMER NO.	JENN FENG ELECTRIC INDUSTRIAL CO., LTD.
		DRAWN BY Jason	TITLE IN LINE FUSEHOLDER
		CHECKED BY 林進有	
		APPROVED BY 鄭文和	
P/N		DATE 2014/10/1	PART NO. JEF-709N
REV	A	SCALE	DRAWING NO. BA14100102