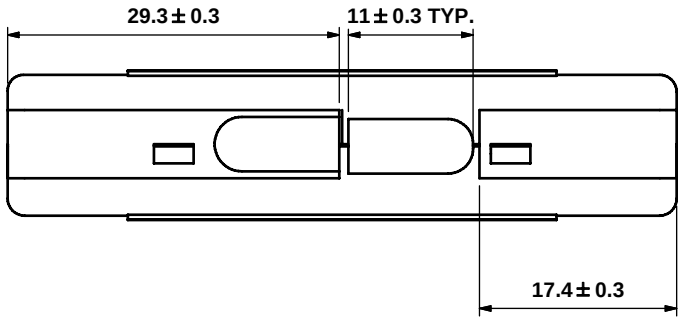

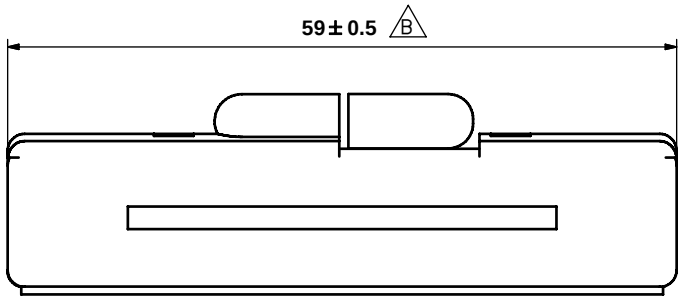

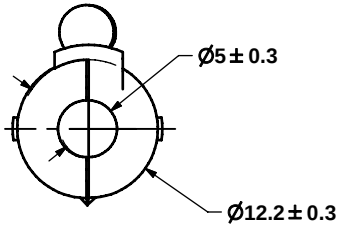

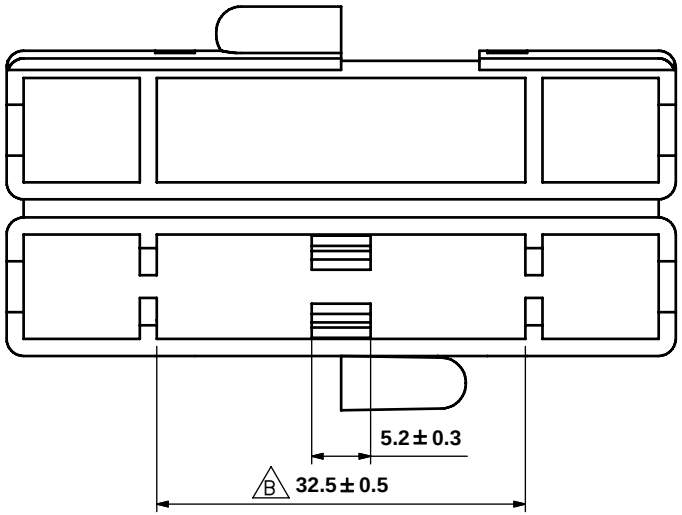

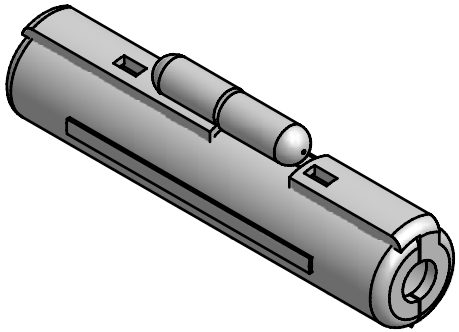

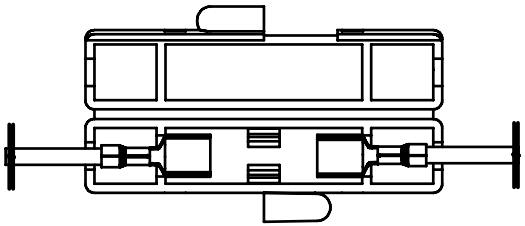

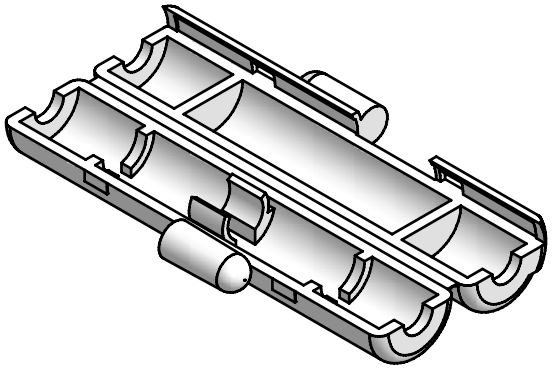

Specification:
- Electrical Rating:Max. 20A 32V
- Insulation Body:Nylon
- Contacts:Tin plated Brass
- Applicable:For 3AG fuse type, MFA,AGC,SFE
- Wire Range:#16~#20

振豐電子
2010.02.25
發行章

UNLESS OTHERWISE SPECIFIED DIMENSIONS ARE IN MM TOLERENCE DECIMALS X± 0.5 XX± 0.25 ANGULAR ± 2° DO NOT SCALE DRAWING		CUSTOMER NO.	JENN FENG ELECTRIC INDUSTRIAL CO., LTD
		DRAWN BY JANE	TITLE IN-LINE FUSEHOLDER
		CHECKED BY	
		APPROVED BY 鄭文和	
P/N	B5305051N	DATE 2008/4/14	PART NO. JEF-706
REV	B	SCALE	DRAWING NO. BA04100501