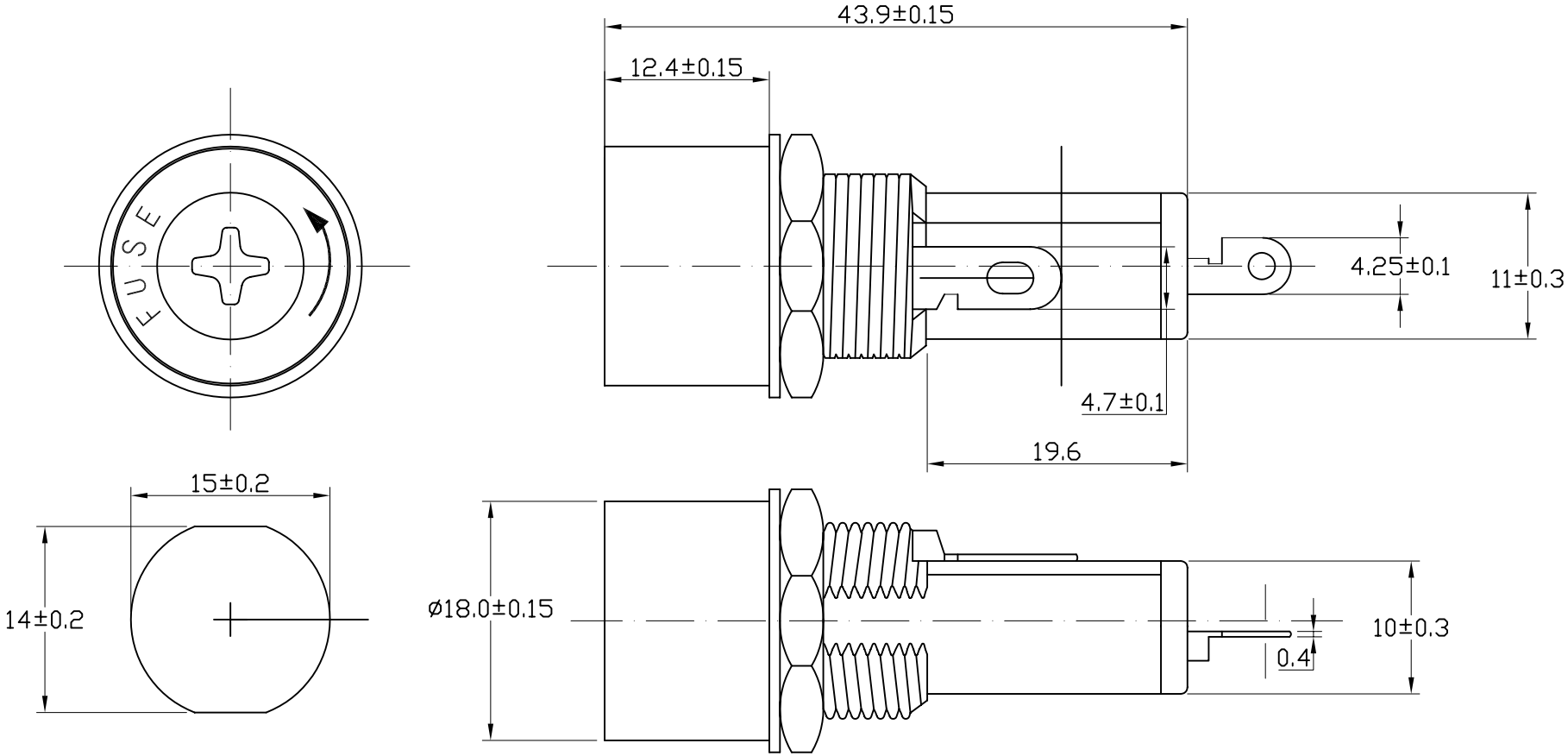

FUSE HOLDER PANEL MOUNT TYPE FOR
6.3X30mmAND 6.3X32mm FUSES UL & CSA
APPROVED

SPECIFICATIONS:

*Electrical:Rated at 10A 250V AC
*Insulating Boby:Bakelite
*Konb:Insert style fuse extractor type with nickel-plated copper alloy insert.Spring loaded.
*Terminals:Nickel-plated copper alloy,solder type. Straight terminal.

UNLESS OTHERWISE SPECIFIED DIMENSIONS ARE IN MM TOLERENCE DECIMALS X ± 0.5 XX ± 0.25 ANGULAR ± 2° DO NOT SCALE DRAWING	CUSTOMER NO.	JENN FENG ELECTRIC INDUSTRIAL CO., LTD.
	DRAWN BY	TITLE FUSE HOLDER
	CHECKED BY	
	APPROVED BY	
P/N:	DATE 2004.04.22	PART NO. JEF-605A
REV	SCALE	DRAWING NO. AA04042201