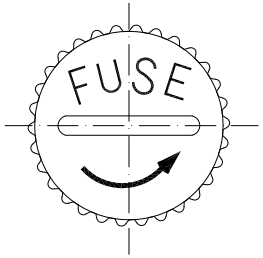

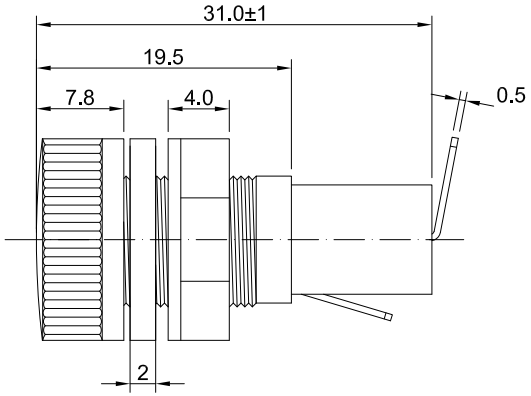

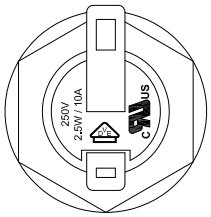

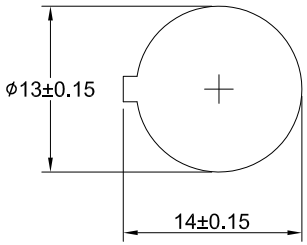

Recommend mount hole

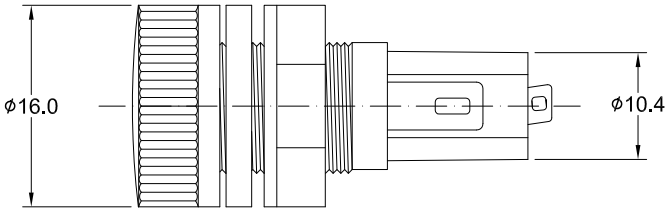

振豐電子
2014.04.09
發行章

FOR ϕ5.2X20mm FUSES

SPECIFICATIONS:

*Electrical:Rated at 10A 250V AC

*Insulating Boby:UL94 V0 flame retardant polycarbonate

*Konb:Finger-grip type with nickel-plated copper alloy insert.

*Terminals:Nickel-plated copper alloy,solder type.

*Bottom Contact:With spring

UNLESS OTHERWISE SPECIFIED DIMENSIONS ARE IN mm TOLERANCE DECIMALS X±0.5 XX±0.25 ANGULAR ±2° DO NOT SCALE DRAWING	CUSTOMER NO.	JENN FENG ELECTRIC INDUSTRIAL CO., LTD.	
	DRAWN BY Jason	TITLE PANEL MOUNT FUSE HOLDER	
	CHECKED BY		
	APPROVED BY 鄭文和		
P/N A5711019N	DATE 2014/2/7	PART NO. JEF-603D	
REV A	SCALE	DRAWING NO. AA04101302	