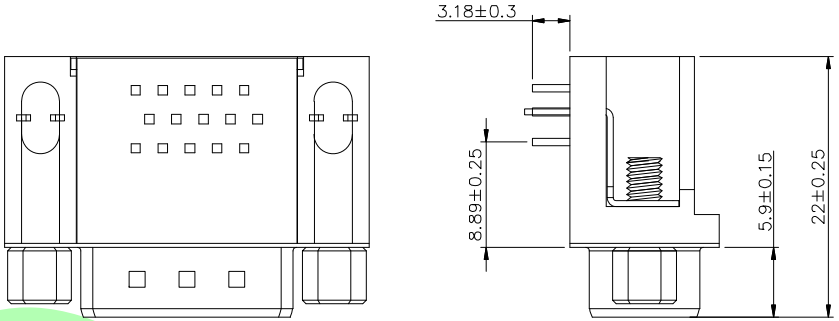


所有材料為
"環保材料"
2014.12.31
RoHS

# NOTES:

## 1. MATERIAL

1.1 Insulator: PBT +30% Glass Fiber, UL94V-0
1.2 Color: Black
1.3 Contact: Brass
1.4 Contact Plated: Gold-flash over nickel plated
1.5 Dip area plated: Tin plated or Gold-flash
1.6 Shell: SPCC plate with nickel plated
1.7 Screw: Copper Alloy with nickel plated

## 2. SPECIFICATION

2.1 Dielectric Strength: 500V for one minute
2.2 Insulator Resistance: 1000MΩ Min. at 500V DC
2.3 Contact Resistance: 20mΩ max.
2.4 Temperature: -55℃ ～ +105℃
2.5 Rated Current: 5Amp

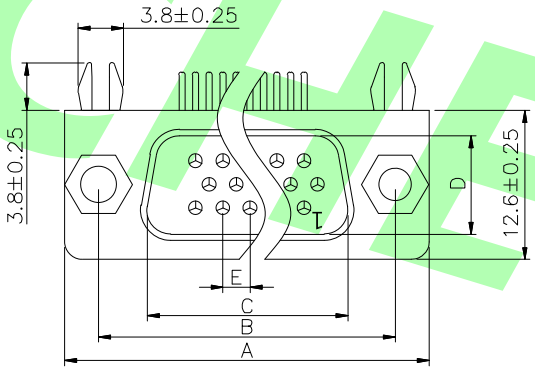


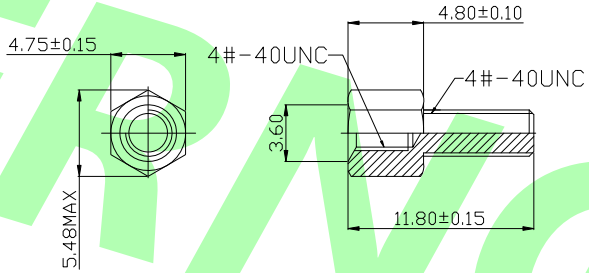


## PART NO.

CDBR XX H M XX - __

- Series No. D-SUB 90°
- Pin Size
- H :High Density
- Male
- Type:
  - T :Jack Screw Insert
  - UN :Rivet
  - U :Rivet & Jack Screw Attached
  - UT :Rear & Jack Screw Insert
- Contact:
  - *:Gold Flash / Tin plated
  - 2:Gold Flash

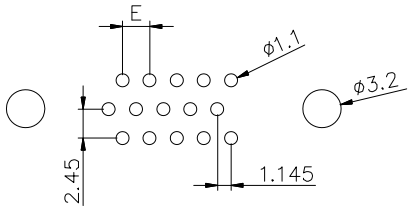


| Poles | A±0.25 | B±0.25 | C±0.25 | D±0.25 | E±0.25 |
|---|---|---|---|---|---|
| 15 | 30.81 | 24.99 | 16.92 | 8.38 | 2.29 |
| 26 | 39.25 | 33.32 | 25.25 | 8.38 | 2.29 |
| 44 | 53.04 | 47.04 | 38.96 | 8.38 | 2.29 |
| 62 | 69.32 | 63.50 | 55.42 | 8.38 | 2.41 |

| T Type | UN & U Type | UT Type |
|---|---|---|
| 叉鎖 | 鉚合不附螺絲<br>鉚合附螺絲 | 鉚合鎖螺絲 |
| 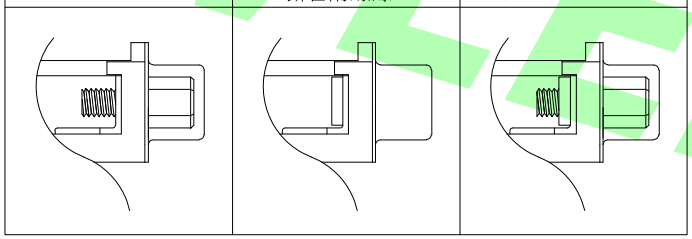 | | |

CHERNG WEI

承洧科技股份有限公司
Cherng Weei Technology Corp.

| | | | | | |
|---|---|---|---|---|---|
| DESCRIPTION(內容): D-SUB 90° (Male) 三排 半金.全金（黑） | DRAWN(製圖): GONG | GENERAL TOLERANCE: (公差) .0 ±0.1, .00 ±0.02, .000 ±0.03 | REV: R0 | REV | DESCRIPTION | DATE |
| | CHECKED(確認): TERESA | | UNIT: mm | R0 | RELEASE | 2014.12.31 |
| PART NO: (料號) CDBRXXHMXX-__ | APPROVAL(核准): JOHNNY | SCALE(比例): FREE | SIZE: A4 | R1 | | |
| DWG NO(圖號): | | | SHEET: 1/1 | R2 | | |
| | | | | R3 | | |